REMOTE SINGLE STROBE WINDSHIELD LIGHT

(FOR INTERIOR USE)

E24HSBE(x)

3900 Central Parkway
Hudsonville, MI 49426
toll free 800.338.7337
office 616.896.7100
techsupport@soundoffsignal.com
www.soundoffsignal.com

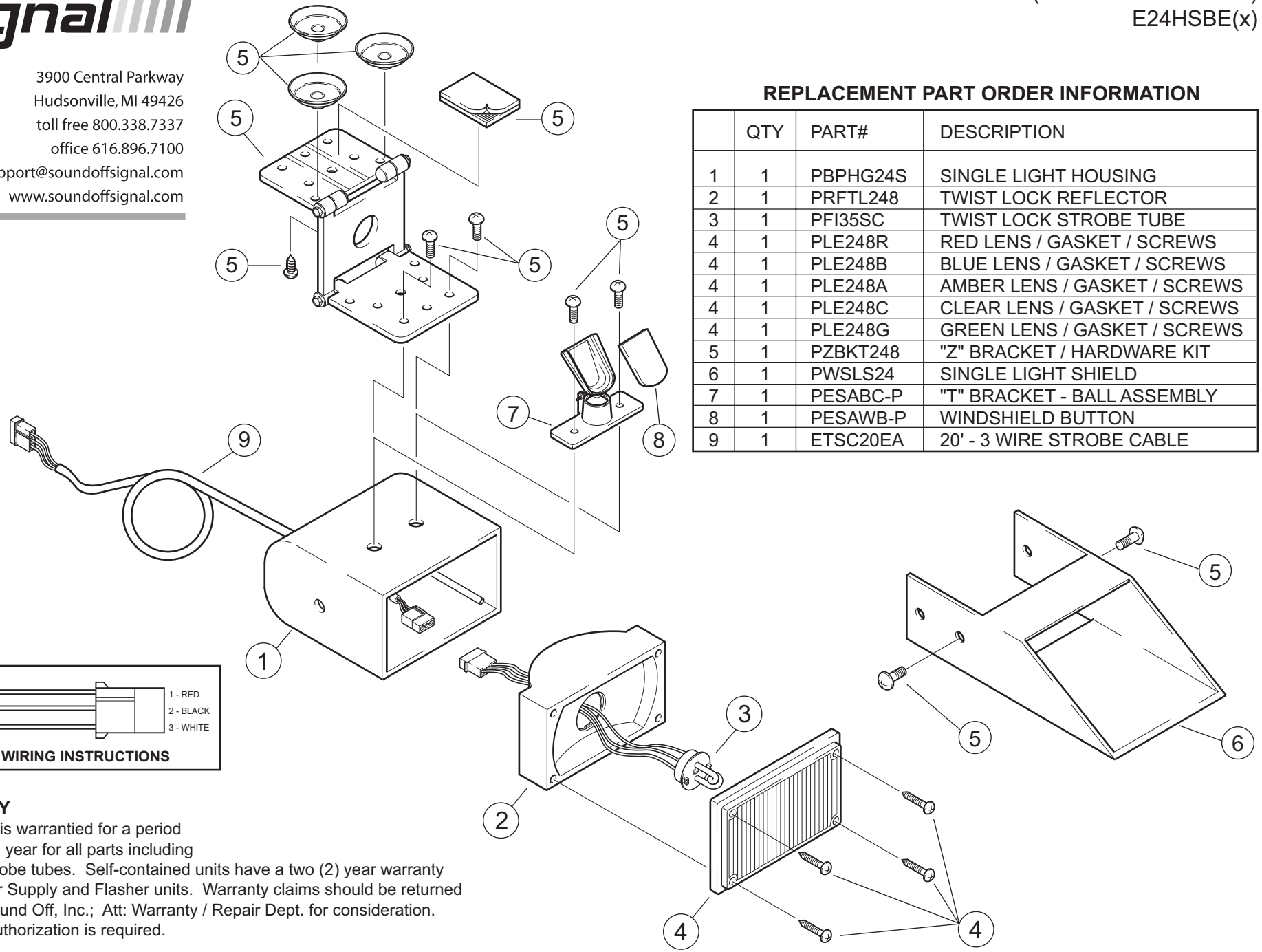

REPLACEMENT PART ORDER INFORMATION

	QTY	PART#	DESCRIPTION
1	1	PBPHG24S	SINGLE LIGHT HOUSING
2	1	PRFTL248	TWIST LOCK REFLECTOR
3	1	PFI35SC	TWIST LOCK STROBE TUBE
4	1	PLE248R	RED LENS / GASKET / SCREWS
4	1	PLE248B	BLUE LENS / GASKET / SCREWS
4	1	PLE248A	AMBER LENS / GASKET / SCREWS
4	1	PLE248C	CLEAR LENS / GASKET / SCREWS
4	1	PLE248G	GREEN LENS / GASKET / SCREWS
5	1	PZBKT248	"Z" BRACKET / HARDWARE KIT
6	1	PWSLS24	SINGLE LIGHT SHIELD
7	1	PESABC-P	"T" BRACKET - BALL ASSEMBLY
8	1	PESAWB-P	WINDSHIELD BUTTON
9	1	ETSC20EA	20' - 3 WIRE STROBE CABLE

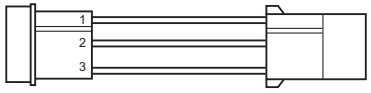

CABLE WIRING INSTRUCTIONS

WARRANTY

This product is warrantied for a period of one (1) full year for all parts including bulbs and strobe tubes. Self-contained units have a two (2) year warranty for the Power Supply and Flasher units. Warranty claims should be returned directly to Sound Off, Inc.; Att: Warranty / Repair Dept. for consideration. No Return Authorization is required.